SHRACHI®
Agrimech
Khushali Hamesha

PARTS CATALOGUE

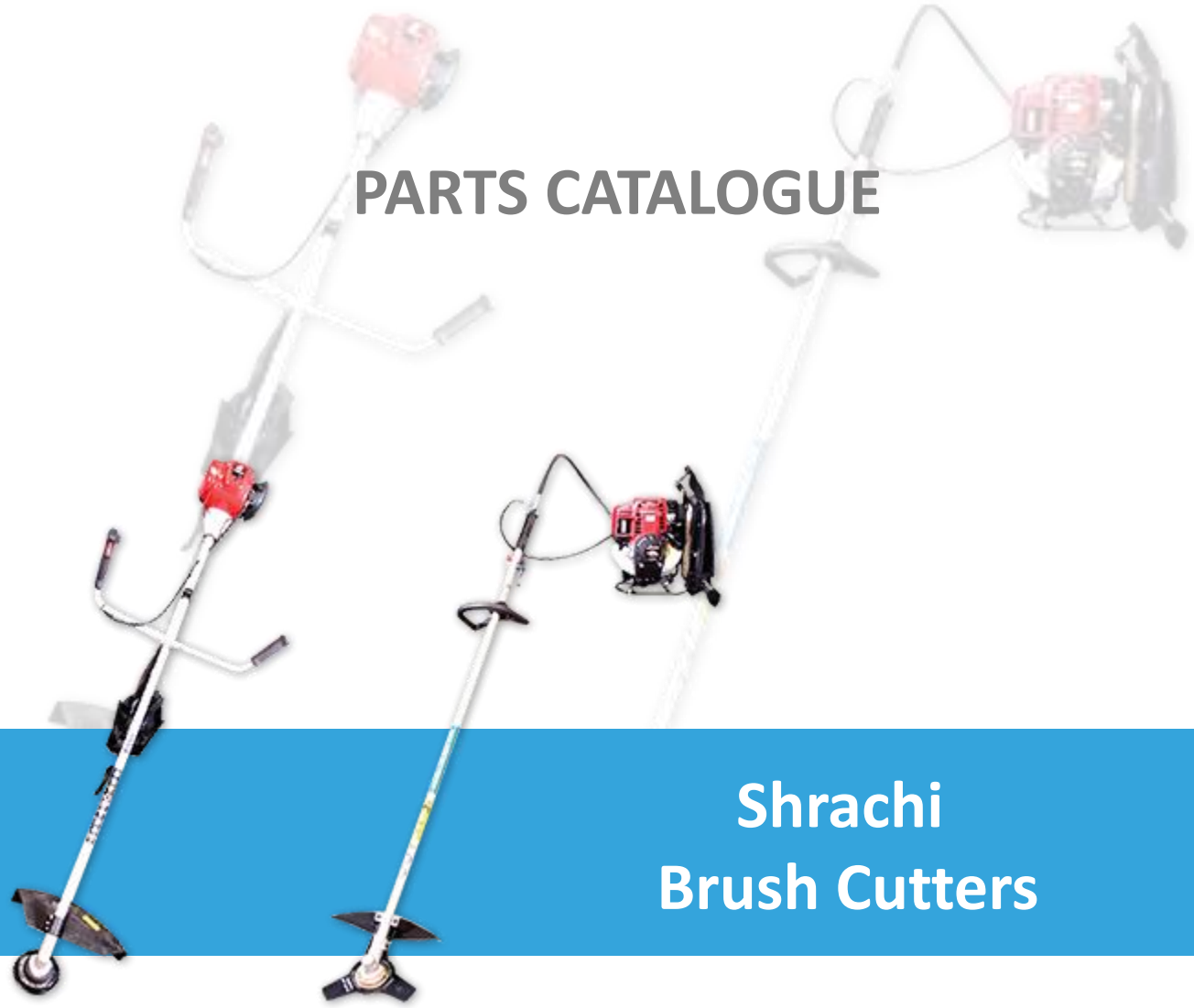

Shrachi
Brush Cutters

Parts Catalog

Engine Catalog

35cc Shoulder Type (Fig. I)

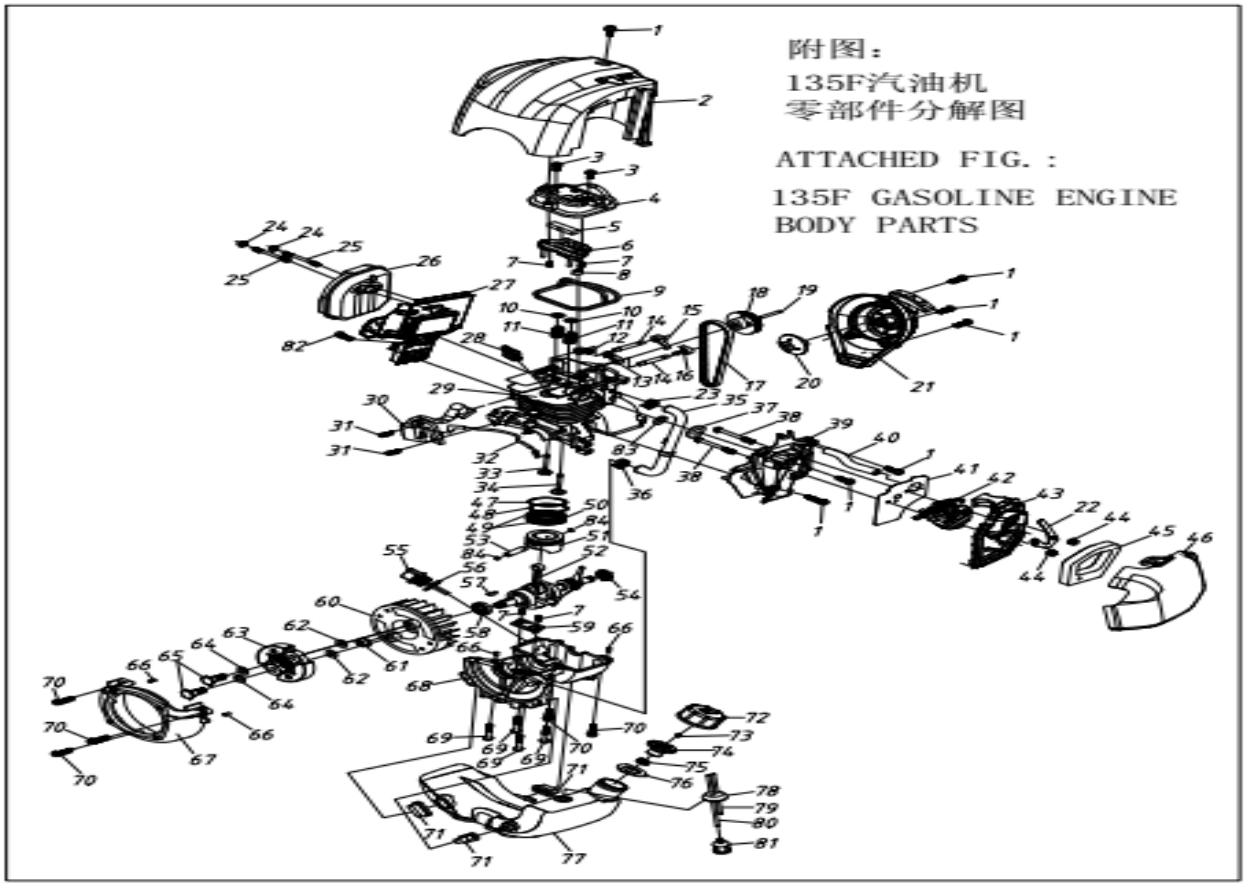

SI. NO.	PART IMAGE	DESCRIPTION	CHINESE CODE	ERP CODE	GRP	QTY PER MACHINE	MOQ	UNIT RATE	ORDER QTY	TOTAL RATE
1		Screw	135F-LD14	SPGBKCGE350101						0
2		Cylinder Cover	135F.12	SPGBKCGE350102						0
3		Screw	135F-LD10	SPGBKCGE350103						0
4		Cylinder valve cover	135F.4-1	SPGBKCGE350104						0
5		Oil gas separator	140FA-16	SPGBKCGE350105						0
6		Inside cover	135F.4.1	SPGBKCGE350106						0
7		Screw M4X8	GB/T818	SPGBKCGE350107						0
8		Rubber cushion	140FA-17	SPGBKCGE350108						0
9		Rubber cushion	135F.4-2	SPGBKCGE350109						0
10		Valve Spring seat	140FA.1-2	SPGBKCGE350110						0

11		Valve spring	135F.5-1	SPGBKCGE35 0111						0
12		Exhaust valve rocker	140FA.1.4	SPGBKCGE35 0112						0
13		Inlet valve rocker	140FA.1.5	SPGBKCGE35 0113						0
14		Rocker pin	135F.5-4	SPGBKCGE35 0114						0
15		Exhaust rocker	135F.5-5	SPGBKCGE35 0115						0
16		Inlet rocker	135F.5-6	SPGBKCGE35 0116						0
17		Synchronus belt 319.5-4.5M-6	GB/T13487	SPGBKCGE35 0117						0
18		Cam wheel	135F.7.1	SPGBKCGE35 0118						0
19		Camshaft	135F-6	SPGBKCGE35 0119						0
20		Start reel	139F.9-2	SPGBKCGE35 0120						0
21		Starter	135F.11	SPGBKCGE35 0121						0
22		Baffler	135F.1-3	SPGBKCGE35 0122						0
23		Holding - down clip	3WF-3-3	SPGBKCGE35 0123						0
24		Nut MS	GB/T6187.1	SPGBKCGE35 0124						0
25		Double - edged bolt	135F-9	SPGBKCGE35 0125						0
26		Muffler	135F.10	SPGBKCGE35 0126						0
27		Muffler baffle	135F.9	SPGBKCGE35 0127						0
28		Spark Plug	CMRSH	SPGBKCGE35 0128						0
29		Cylinder	135F.5.1	SPGBKCGE35 0129						0
30		Ignition stator	135F.8-2	SPGBKCGE35 0130						0
31		Screw M4X12	GB/T70.1	SPGBKCGE35 0131						0
32		Stopping wire	135F.8.1	SPGBKCGE35 0132						0
33		Exhaust valve	135F.5-2	SPGBKCGE35 0133						0
34		Inlet valve	135F.5-3	SPGBKCGE35 0134						0
35		Balancing pressure pipe	135F-8	SPGBKCGE35 0135						0

36		Holding - down clip	3WF-3.19-1	SPGBKCGE35 0136						0
37		O-seal ring	140FA-15	SPGBKCGE35 0137						0
38		Screw M5X55	GB/T5780	SPGBKCGE35 0138						0
39		Admitting pipe	135F-5	SPGBKCGE35 0139						0
40		Blast pipe	135F.1-4	SPGBKCGE35 0140						0
41		Gasket	135F-4	SPGBKCGE35 0141						0
42		Carburetor	135F.2	SPGBKCGE35 0142						0
43		Cleaner inside cover	135F.1.1	SPGBKCGE35 0143						0
44		Nut MS	GB/T6177.1	SPGBKCGE35 0144						0
45		Filter net	135F.1-2	SPGBKCGE35 0145						0
46		Air filter cover	135.1-1	SPGBKCGE35 0146						0
47		NO.1 piston ring	135F.6.1-1	SPGBKCGE35 0147						0
48		NO.2 piston ring	135F.6.1-2	SPGBKCGE35 0148						0
49		Oil scraper ring	135F.6.1.1-1	SPGBKCGE35 0149						0
50		Liner ring	135F.6.1.1-2	SPGBKCGE35 0150						0
51		Piston	135F.6-1	SPGBKCGE35 0151						0
52		Crankshaft	135F.6.2	SPGBKCGE35 0152						0
53		Piston pin	135F.6-2	SPGBKCGE35 0153						0
54		Oil seal	140FA.3-1	SPGBKCGE35 0154						0
55		Oil scale	134F-11	SPGBKCGE35 0155						0
56		O-Seal ring 14X2.65	GB3452.1	SPGBKCGE35 0156						0
57		Key 3X5X13	GB1099	SPGBKCGE35 0157						0
58		Oil seal	139F.8	SPGBKCGE35 0158						0
59		Reed valve	140FA.1.3	SPGBKCGE35 0159						0
60		Magneto rotor comp.	135F.8-1	SPGBKCGE35 0160						0

61		Nut	135F-10	SPGBKCGE350161						0
62		Washer	1E34F-11	SPGBKCGE350162						0
63		Clutch	1E34F.10	SPGBKCGE350163						0
64		Washer	1E34F-13	SPGBKCGE350164						0
65		Screw pin	1E34F-12	SPGBKCGE350165						0
66		Pin B4X8	GB119.2	SPGBKCGE350166						0
67		Magneto cover	135F-7	SPGBKCGE350167						0
68		Crankcase	135F.5.2-1	SPGBKCGE350168						0
69		Screw	135F-LD30	SPGBKCGE350169						0
70		Screw	135F-LD20	SPGBKCGE350170						0
71		Rubber cushion	140FA-4	SPGBKCGE350171						0
72		Fuel tank lid	140FA.5.1-1	SPGBKCGE350172						0
73		Air admission valve	140FA.5.1-4	SPGBKCGE350173						0
74		Inside cover	140FA.5.1-3	SPGBKCGE350174						0
75		Shell cover	140FA.5.1-5	SPGBKCGE350175						0
76		Gasket	140FA.5.1-2	SPGBKCGE350176						0
77		Fuel tank	135F.3-1	SPGBKCGE350177						0
78		Plug	135F.3.1-1	SPGBKCGE350178						0
79		Fuel return pipe		SPGBKCGE350179						0
80		Fuel suction pipe		SPGBKCGE350180						0
81		Cleaner	1E34F.9.2-3A	SPGBKCGE350181						0
82		Screw M5X10	GB/ T5789	SPGBKCGE350182						0
83		Rubber packing	140FA-7	SPGBKCGE350183						0
84		Ring	1E31F.4-3	SPGBKCGE350184						0
85		Fuel Suction & return pipe complete set		SPGBKCGE350185						0

43cc Backpack Type (Fig. II)

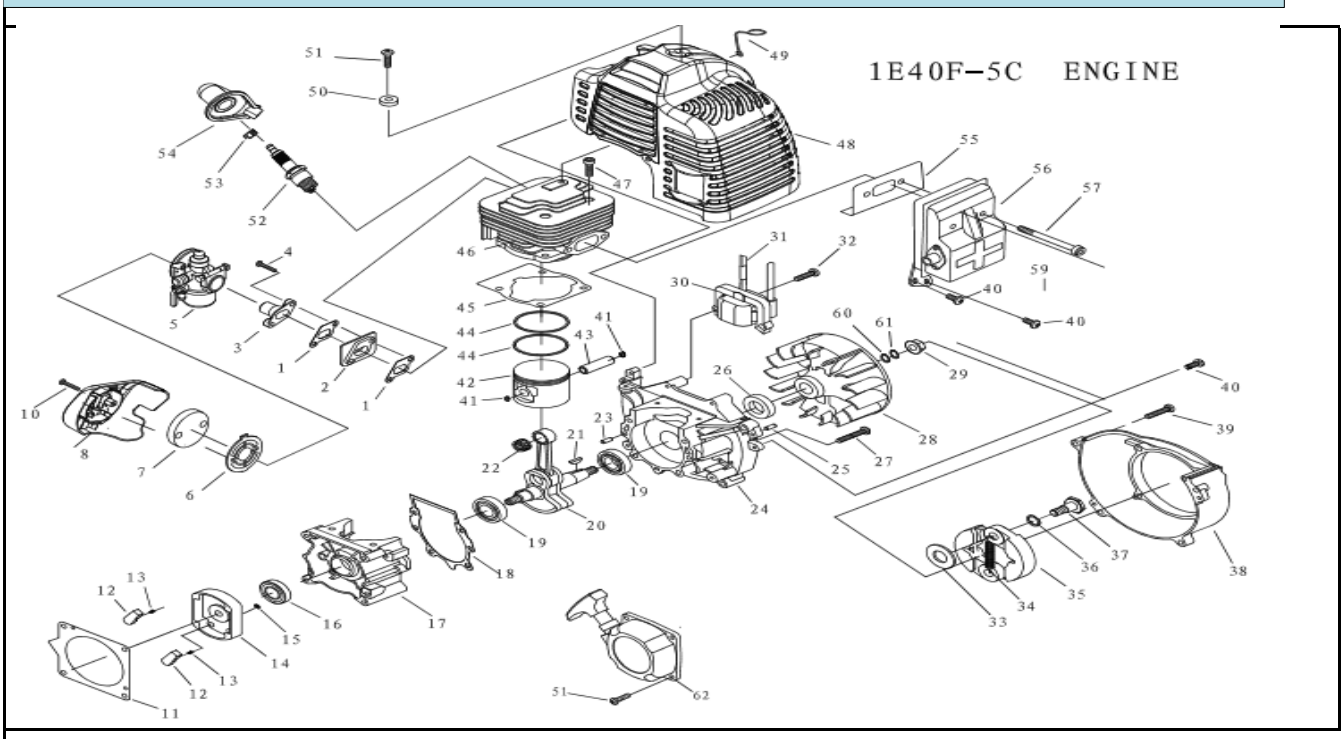

SI. NO.	PART IMAGE	DESCRIPTION	CHINESE CODE	ERP CODE	GRP	QTY PER MACHINE	MOQ	UNIT RATE	ORDER QTY	TOTAL RATE
1	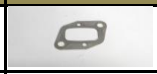	Gasket	1E40F-5-2	SPGBKBGE43 0101						0
2		Gasket	1E40F-5-3	SPGBKBGE43 0102						0
3		Admitting Pipe	1E40F-5-1	SPGBKBGE43 0103						0
4		Screw M5×12	GB70.1+GB97	SPGBKBGE43 0104						0
5		Carburetor	1E40F-5.1	SPGBKBGE43 0105						0
6		Cleaner fixing base	1E40F-3A.T2-2	SPGBKBGE43 0106						0
7		filter	1E36F.16-2	SPGBKBGE43 0107						0
8		cleaner Outside cover	1E40F-5C.6-1	SPGBKBGE43 0108						0
9										0
10		Screw M4×25	GB70.1+GB93 +GB97	SPGBKBGE43 0110						0
11		Gasket	1E40F-5-10	SPGBKBGE43 0111						0
12		Start Claw	1E36F-2C.5-3	SPGBKBGE43 0112						0
13		Start Spring	1E36F-2C.5-2	SPGBKBGE43 0113						0

14		Start Reel	1E36F-2C.5-1	SPGBKBGE43 0114						0
15		Stop ring 4	GB/T896	SPGBKBGE43 0115						0
16		Seal	1E36F.2	SPGBKBGE43 0116						0
17		Crank Case	1E40F-5.8-2	SPGBKBGE43 0117						0
18		Gasket	1E40F-5.8-4	SPGBKBGE43 0118						0
19		Bearing 6202/P6	GB/T276	SPGBKBGE43 0119						0
20		Crankshaft assy	1E40F-5.4.1	SPGBKBGE43 0120						0
21		Key 3×5×13	GB/T099	SPGBKBGE43 0121						0
22		Bearing	1E40F-5.4-2	SPGBKBGE43 0122						0
23		GB/T119	GB/T119	SPGBKBGE43 0123						0
24		Crank Case	1E40F-5C.3-1	SPGBKBGE43 0124						0
25		Pin 4h8×10	GB/T119	SPGBKBGE43 0125						0
26		seal	1E40F-5.9	SPGBKBGE43 0126						0
27		Screw M5×30	GB/T70.1	SPGBKBGE43 0127						0
28		Fly wheel	1E44F-2A.6.1	SPGBKBGE43 0128						0
29		Nut M8	GB/T6170	SPGBKBGE43 0129						0
30		Coil	1E40F-5C.1-XS.1	SPGBKBGE43 0130						0
31		cord comp	1E40F-5C.1.2	SPGBKBGE43 0131						0
32		screw M5×20	GB70.1+GB93 +GB97	SPGBKBGE43 0132						0
33			1E36F-3	SPGBKBGE43 0133						0
34		Spring	1E36F-E.6B-1	SPGBKBGE43 0134						0
35		Expander	1E36F-2C.4.1	SPGBKBGE43 0135						0
36		washer	1E40F-5-11	SPGBKBGE43 0136						0

37		Screw Pin	P40-18	SPGBKBGE43 0137						0

38		Fan Cover	1E40F-5C-1	SPGBKBGE43 0138						0
39		Screw M5×25	GB70.1+GB93 +GB97	SPGBKBGE43 0139						0
40		Screw M5×12	GB70.1+GB93 +GB97	SPGBKBGE43 0140						0
41		Ring	1E40F-03.02.01	SPGBKBGE43 0141						0
42		Piston	1E40F-5.4-1	SPGBKBGE43 0142						0
43		Piston Pin	1E46FP.6-3	SPGBKBGE43 0143						0
44		Piston Ring	1E40FP-3Z.3-5	SPGBKBGE43 0144						0
45		Gasket	1E40F-5-6	SPGBKBGE43 0145						0
46		Cylinder	1E40F-5-4A	SPGBKBGE43 0146						0
47		Screw M5×20	GB/T70.1	SPGBKBGE43 0147						0
48		Guide cover assy	1E40F-5C.2	SPGBKBGE43 0148						0
50		Gasket	1E36F-2C-1	SPGBKBGE43 0150						0
51		Screw M5×20	GB70.1+GB93 +GB97	SPGBKBGE43 0151						0
52		Plug	L6	SPGBKBGE43 0152						0
53	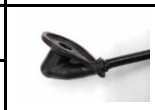	Spring	1E36F-2C.6-2	SPGBKBGE43 0153						0
54		Cap	1E36F-2C.6-1	SPGBKBGE43 0154						0
55		Gasket	1E40F-HS-1	SPGBKBGE43 0155						0
56		Muffler	1E40F-HS.2	SPGBKBGE43 0156						0
57		Screw M6×55-10.9	GB70.1+GB97	SPGBKBGE43 0157						0
58										0
59										0
60		Washer 8	GB/T97.1	SPGBKBGE43 0160						0
61		Washer 8	GB/T859	SPGBKBGE43 0161						0

62		Starter	1E36F-2C.3	SPGBKBGE43 0162						0

43cc Backpack Type Fuel Tank (Fig. III)

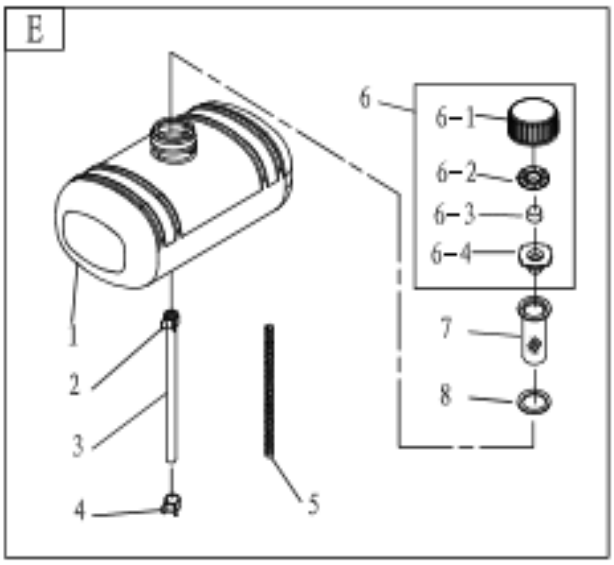

SI. NO.	PART IMAGE	DESCRIPTION	CHINESE CODE	ERP CODE	GRP	QTY PER MACHINE	MOQ	UNIT RATE	ORDER QTY	TOTAL RATE
1		Fuel tank	BG330H.3-1	SPGBKBGE43 0201						0
2		Clip	3WF-3-3	SPGBKBGE43 0202						0
3		Fuel pipe	BG415-6	SPGBKBGE43 0203						0
4		fuel Pipe Clip	BG415-8	SPGBKBGE43 0204						0
5		Spring	BG430.1-1	SPGBKBGE43 0205						0
6		Fuel tank lid assy	BG305.10.2	SPGBKBGE43 0206						0
6-a		fuel tank lid	BG305.10.2-1	SPGBKBGE43 0207						0
6-b		plastic inner lid	BG305.10.2-3	SPGBKBGE43 0208						0
6-c		Filter Core	BG-328.7-4	SPGBKBGE43 0209						0
6-d		Rubber Inner Lid	BG305.10.2-2	SPGBKBGE43 0210						0
7		Filter Net Casting	BG305.10.1	SPGBKBGE43 0211						0
8		Washer	BG305.10-2	SPGBKBGE43 0212						0

43cc Shoulder Type (Fig. IV)

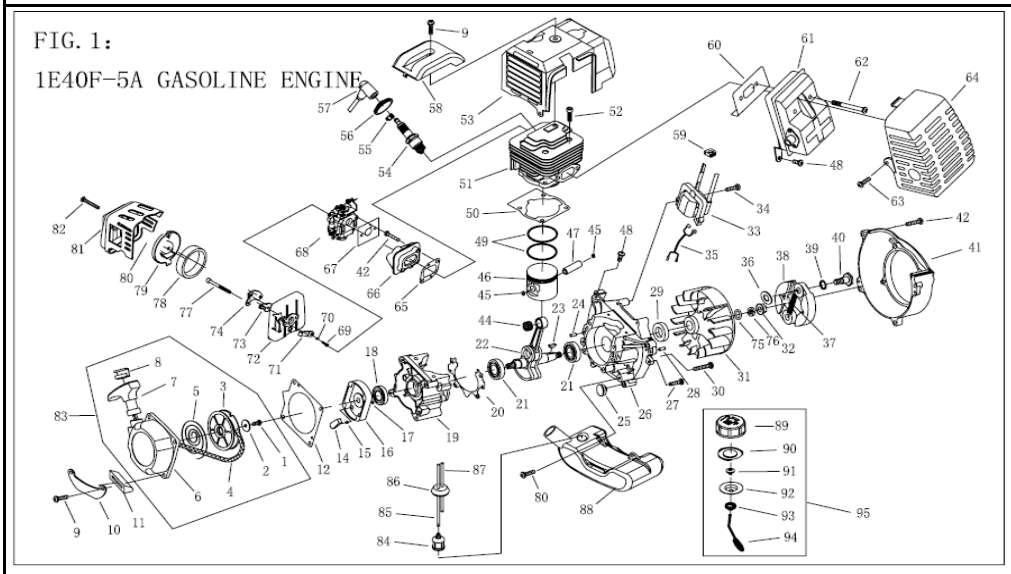

SI. NO.	PART IMAGE	DESCRIPTION	CHINESE CODE	ERP CODE	GRP	QTY PER MACHINE	MOQ	UNIT RATE	ORDER QTY	TOTAL RATE
1		Screw M5×12-9.8-DZ	GB67	SPGBKCGE430101						0
2		Washer	1E40F-5.11-2	SPGBKCGE430102						0
3		Start Rope reel	1E40F-5.11-1	SPGBKCGE430103						0
4		Rope	1E40F-5.11-4	SPGBKCGE430104						0
5		Recoil Spring	1E40FP-3Z.4-7	SPGBKCGE430105						0
6		Start Cover assy	1E40F-5.11.1	SPGBKCGE430106						0
7		Start Handle	1E40FP-3Z.4-2	SPGBKCGE430107						0
8		Ring	1E40FP-3Z.4-10	SPGBKCGE430108						0
9		Screw M5×20	GB70.1+GB93+GB97	SPGBKCGE430109						0
10		Stand	1E40F-5A-4	SPGBKCGE430110						0
11		Rubber cover	1E40F-5A-2	SPGBKCGE430111						0
12		Gasket	1E40F-5-10	SPGBKCGE430112						0

13										0
14		Start Claw	1E36F-2C.5-3	SPGBKCGE43 0114						0
15	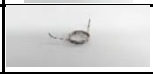	Start Sprin	1E36F-2C.5-2	SPGBKCGE43 0115						0
16		Start Reel	1E36F-2C.5-1	SPGBKCGE43 0116						0
17		Stop ring 4	GB896	SPGBKCGE43 0117						0
18		Oil- Seal	1E36F.2	SPGBKCGE43 0118						0
19		Crank Case	1E40F-5.8-2	SPGBKCGE43 0119						0
20		Gasket	1E40F-5.8-4	SPGBKCGE43 0120						0
21		Bearing 6202/P6	GB/T276	SPGBKCGE43 0121						0
22		Crank Shaft	1E40F-5.4.1	SPGBKCGE43 0122						0
23		Key3×13	GB1099	SPGBKCGE43 0123						0
24		Pin 4h8×10	GB119	SPGBKCGE43 0124						0
25		Rubber Washer	1E40F-5A-3	SPGBKCGE43 0125						0
26		Crank Case	1E40F-5.8-1	SPGBKCGE43 0126						0
27		Screw M5×16	GB70.1+GB93 +GB97	SPGBKCGE43 0127						0
28		Pin 4h8×10	GB119	SPGBKCGE43 0128						0
29		Oil- Seal	1E40F-5.9	SPGBKCGE43 0129						0
30		screw M5×30	GB70.1	SPGBKCGE43 0130						0
31		Fly wheel	1E44F-2A.6.1	SPGBKCGE43 0131						0
32		Nut M8	GB6170	SPGBKCGE43 0132						0
33		Stator	1E40F-5.3.3	SPGBKCGE43 0133						0
34		Bolt M5×20	GB70.1+GB93 +GB97	SPGBKCGE43 0134						0
35		Cord Comp.	SG230-2B	SPGBKCGE43 0135						0
36		Washer B	1E36F-3	SPGBKCGE43 0136						0
37		Spring	1E36F-E.6B-1	SPGBKCGE43 0137						0
38		Expander	1E36F-2C.4.1	SPGBKCGE43 0138						0

39		Washer	1E40F-5-11	SPGBKCGE430139						0
40		Screw Pin	1E40F-5-12	SPGBKCGE430140						0
41		Fan cover	1E40F-5-9	SPGBKCGE430141						0
42		Bolt M5×25	GB70.1+GB93+GB97	SPGBKCGE430142						0
43										0
44		Bearing	1E40F-5.4-2	SPGBKCGE430144						0
45		Ring	1E40F-03.02.01	SPGBKCGE430145						0
46		Piston	1E40F-5.4-1	SPGBKCGE430146						0
47		Piston Pin	1E46FP.6-3	SPGBKCGE430147						0
48		Bolt M5×12	GB70.1+GB93+GB97	SPGBKCGE430148						0
49		Piston Ring	1E40FP-3Z.3-5	SPGBKCGE430149						0
50		Gasket	1E40F-5-6	SPGBKCGE430150						0
51		Cylinder	1E40F-5-4A	SPGBKCGE430151						0
52		Screw M5×20	GB70	SPGBKCGE430152						0
53		Guide Cover Assy	1E40F-5.5	SPGBKCGE430153						0
54		Spark Plug	L6	SPGBKCGE430154						0
55		Spring	1E40F-3A.8-2	SPGBKCGE430155						0
56		Plug Cap	1E34F.5-3	SPGBKCGE430156						0
57		Cap	1E34F.5-2	SPGBKCGE430157						0
58		Cover	1E40F-5-8	SPGBKCGE430158						0
59		Plug	1E40F-5.3-1	SPGBKCGE430159						0
60		Gasket	1E40F-5-5	SPGBKCGE430160						0
61		Muffler	1E40F-5.2	SPGBKCGE430161						0
62		Screw M6×55-10.9	GB70.1+GB97	SPGBKCGE430162						0
63		Screw M5×20	BC36.4-2+GB70.1+GB97	SPGBKCGE430163						0
64		Muffler Cover	1E40F-5-7	SPGBKCGE430164						0
65		Gasket	1E40F-5-2	SPGBKCGE430165						0

66		Admitting Pipe	HA46.9	SPGBKCGE430166						0
67		Gasket	1E40F-5A-1	SPGBKCGE430167						0
68		Carburetor	1E40F-5A.8C	SPGBKCGE430168						0
69		Screw ST2.9×7.5	GB845	SPGBKCGE430169						0
70		Washer 3	GB97.1	SPGBKCGE430170						0
71		Choke Handle	1E40F-5A.1.1-1	SPGBKCGE430171						0
72		Inside Cover	1E40F-5A.1.1.1	SPGBKCGE430172						0
73		Choke	1E40F-5A.1.1-2	SPGBKCGE430173						0
74		Baffle	1E40F-5A.1.2	SPGBKCGE430174						0
75		Washer 8	GB/T859	SPGBKCGE430175						0
76		Washer 8	GB/T97.1	SPGBKCGE430176						0
77		Screw M5×55	GB70.1+GB93+GB97	SPGBKCGE430177						0
78		Filter	1E34F.1-1	SPGBKCGE430178						0
79		Inside Cover	1E40F-5A.1-2	SPGBKCGE430179						0
80		Screw M5×16	GB70.1+GB93+GB97	SPGBKCGE430180						0
81		Outside Cover	1E40F-5.11	SPGBKCGE430181						0
82		Screw M5×18	GB70.1+GB93+GB97	SPGBKCGE430182						0
83		Starter	1E40F-5.11	SPGBKCGE430183						0
84		Cleaner Cover	P40.12.2-3A	SPGBKCGE430184						0
85		Fuel Pipe	CG420.1.3.2-2	SPGBKCGE430185						0
86		Plug	EB-415.4.2-2	SPGBKCGE430186						0
87		Fuel Pipe	EB-415.4.2-4	SPGBKCGE430187						0
88		Fuel Tank	1E40F-5A.4.1	SPGBKCGE430188						0
89		Fuel Tank Lid	1E32FL.6.2-1	SPGBKCGE430189						0
90		Gasket	CG420.1.3.1-2	SPGBKCGE430190						0

91		Inlet	EB-415.4.1.1-1	SPGBKCGE430191						0
92		Inside Cover	1E32FL.6.2-2	SPGBKCGE430192						0
93		Lid	1E32FL.6.2-3	SPGBKCGE430193						0
94		Chain	1E32FL.6.2-4	SPGBKCGE430194						0
95		Fuel tank Lid Comp	1E32FL.6.2	SPGBKCGE430195						0

52cc Shoulder Type (Fig. V)

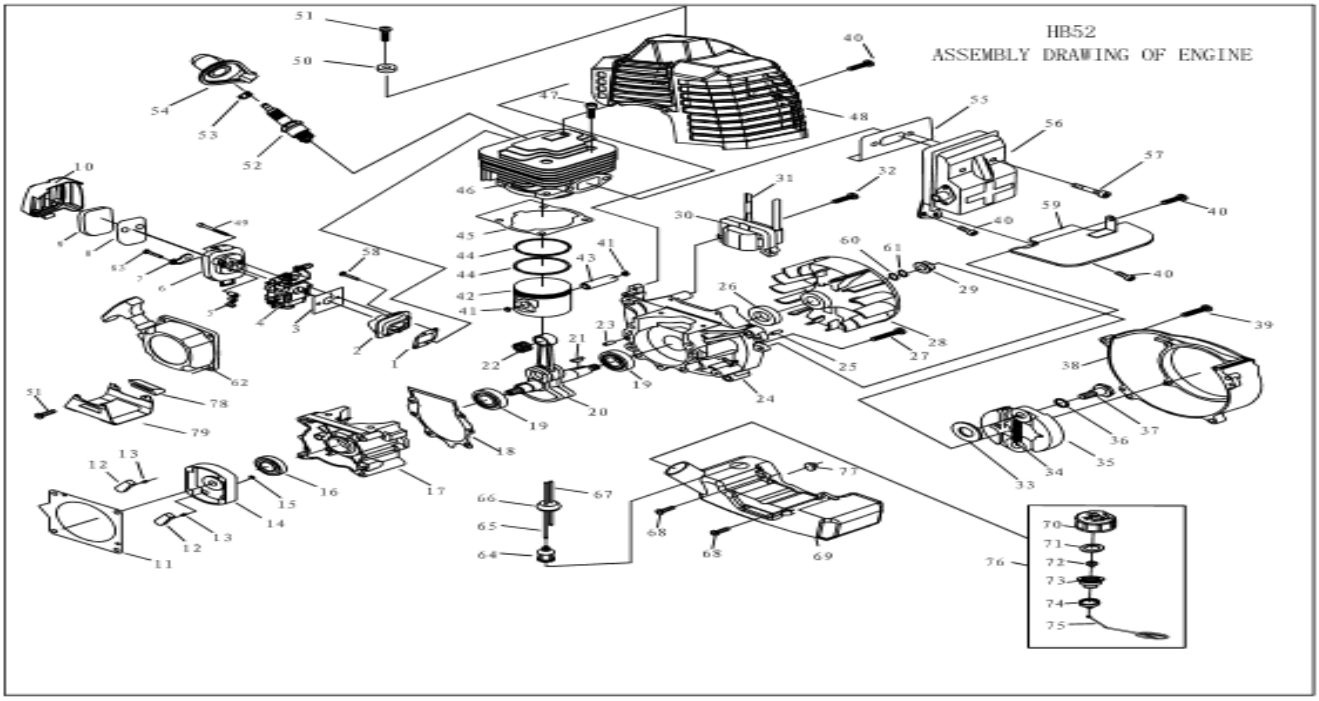

SI. NO.	PART IMAGE	DESCRIPTION	CHINESE CODE	ERP CODE	GRP	QTY PER MACHINE	MOQ	UNIT RATE	ORDER QTY	TOTAL RATE
1		Gasket	1E40F-5-2	SPGBKCGE52 0101						0
2		Admitting Pipe	HA46.9	SPGBKCGE52 0102						0
3		Gasket	1E40F-5A-1	SPGBKCGE52 0103						0
4		Carburetor	1E44F-2A.1	SPGBKCGE52 0104						0
5		Choker Handle	HB33.3.1-2	SPGBKCGE52 0105						0
6		Cleaner Inside cover	HB33.3.1-1	SPGBKCGE52 0106						0
7		choker	HA36.4.1-2	SPGBKCGE52 0107						0
8		Filter Plate	HB33.3-2	SPGBKCGE52 0108						0
9		Filter net	HB33.3-3	SPGBKCGE52 0109						0
10		Cleaner Outside cover	HB33.3-1	SPGBKCGE52 0110						0
11		Gasket	1E40F-5-10	SPGBKCGE52 0111						0
12		Start Claw	1E36F-2C.5-3	SPGBKCGE52 0112						0
13		Start spring	1E36F-2C.5-2	SPGBKCGE52 0113						0

14		Start Reel	1E36F-2C.5-1	SPGBKCGE52 0114						0
15		Stop Ring 4	GB/T896	SPGBKCGE52 0115						0
16		Seal	1E36F.2	SPGBKCGE52 0116						0
17		Crank case	1E40F-5.8-2	SPGBKCGE52 0117						0
18		Gasket	1E40F-5.8-4	SPGBKCGE52 0118						0
19		Bearing 6202/P6	GB/T276	SPGBKCGE52 0119						0
20		Crankshaft Assy	1E44F-2A.2.1	SPGBKCGE52 0120						0
21		Key 3×5×13	GB/T1099	SPGBKCGE52 0121						0
22		Bearing	1E44F-2A.2-3	SPGBKCGE52 0122						0
23		Pin B5×12	GB/T119	SPGBKCGE52 0123						0
24		Crank Case	1E40F-5C.3-1	SPGBKCGE52 0124						0
25		Pin 4h8×10	GB/T119	SPGBKCGE52 0125						0
26		Seal	1E40F-5.9	SPGBKCGE52 0126						0
27		Screw M5×30	GB70.1+GB93 +GB97	SPGBKCGE52 0127						0
28		Fly Wheel	1E44F-2A.6.1	SPGBKCGE52 0128						0
29		Nut M8	GB/T6170	SPGBKCGE52 0129						0
30		Coil	1E40F-5C.1-XS.1	SPGBKCGE52 0130						0
31		Cord comp.	1E40F-5C.1.2A	SPGBKCGE52 0131						0
32		Screw M5×20	GB70.1+GB93 +GB97	SPGBKCGE52 0132						0
33		Washer B	1E36F-3	SPGBKCGE52 0133						0
34		Spring	1E36F-2C.4-2	SPGBKCGE52 0134						0
35		Expander	1E36F-2C.4.1	SPGBKCGE52 0135						0
36		Washer	1E40F-5-11	SPGBKCGE52 0136						0
37		Screw Pin	P40-18	SPGBKCGE52 0137						0
38		Fan Cover	1E40F-5C-1	SPGBKCGE52 0138						0
39		Screw M5×25	GB70.1+GB93 +GB97	SPGBKCGE52 0139						0

40		Screw M5×12	GB70.1+GB93 +GB97	SPGBKCGE52 0140						0
41		Ring	1E40F-03.02.01	SPGBKCGE52 0141						0
42		Piston	1E44F-2A.2-1	SPGBKCGE52 0142						0
43		Piston pin	1E44F-2A.2-2	SPGBKCGE52 0143						0
44		Piston ring	1E44F-2A.2-4	SPGBKCGE52 0144						0
45		Gasket	1E40F-5-6	SPGBKCGE52 0145						0
46		Cylinder	1E44F-2A.1B	SPGBKCGE52 0146						0
47		Screw M5×20	GB/T70.1	SPGBKCGE52 0147						0
48		Guide Cover assy	HB43.1	SPGBKCGE52 0148						0
49		Screw M5×50	GB70.1+GB97	SPGBKCGE52 0149						0
50		Gasket	1E36F-2C-1	SPGBKCGE52 0150						0
51		Screw M5×20	GB70.1+GB93 +GB97	SPGBKCGE52 0151						0
52		Plug	L7T	SPGBKCGE52 0152						0
53	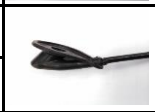	Gasket	1E36F-2C.6-2	SPGBKCGE52 0153						0
54		CAP	1E36F-2C.6-1	SPGBKCGE52 0154						0
55		Gasket	1E40F-HS-1	SPGBKCGE52 0155						0

56		Muffler	1E40F-HS.2	SPGBKCGE52 0156						0
57		Screw M6×55-10.9	GB70.1+GB97	SPGBKCGE52 0157						0
58		Screw M5×25	GB70.1+GB93 +GB97	SPGBKCGE52 0158						0
59		Clapboard	1E40F-5C.4	SPGBKCGE52 0159						0
60		Washer 8	GB/T97.1	SPGBKCGE52 0160						0
61		Washer 8	GB/T859	SPGBKCGE52 0161						0
62		Starter	1E36F-2C.3	SPGBKCGE52 0162						0
63		Screw ST4.2×12	GB/T845	SPGBKCGE52 0163						0
64		Fuel Filter	P40.12.2-3A	SPGBKCGE52 0164						0
65		Fuel Pipe	CG420.1.3.2-2	SPGBKCGE52 0165						0
66		Plug	EB-415.4.2-2	SPGBKCGE52 0166						0
67		Fuel Pipe	EB-415.4.2-4	SPGBKCGE52 0167						0
68		Screw M5×16	GB70.1+GB93 +GB97	SPGBKCGE52 0168						0
69		Fuel Tank	HB43.2.1	SPGBKCGE52 0169						0
70		Fuel tank lid	1E32FL.6.2-1	SPGBKCGE52 0170						0
71		Gasket	CG420.1.3.1-1	SPGBKCGE52 0171						0
72		Inlet	CG420.1.3.1-2	SPGBKCGE52 0172						0

73		Inside Cover	1E32FL.6.2-2	SPGBKCGE52 0173						0
74		Cover	1E32FL.6.2-3	SPGBKCGE52 0174						0
75		Chain	HB33.2.2.1	SPGBKCGE52 0175						0
76		Fuel tank lid comp	HB33.2.2	SPGBKCGE52 0176						0
77		Rubber washer	1E40F-5A-3	SPGBKCGE52 0177						0
78		Rubber Cover	1E40F-5A-2	SPGBKCGE52 0178						0
79		Stand	CG430-E-1	SPGBKCGE52 0179						0

GEAR BOX(Fig. I)

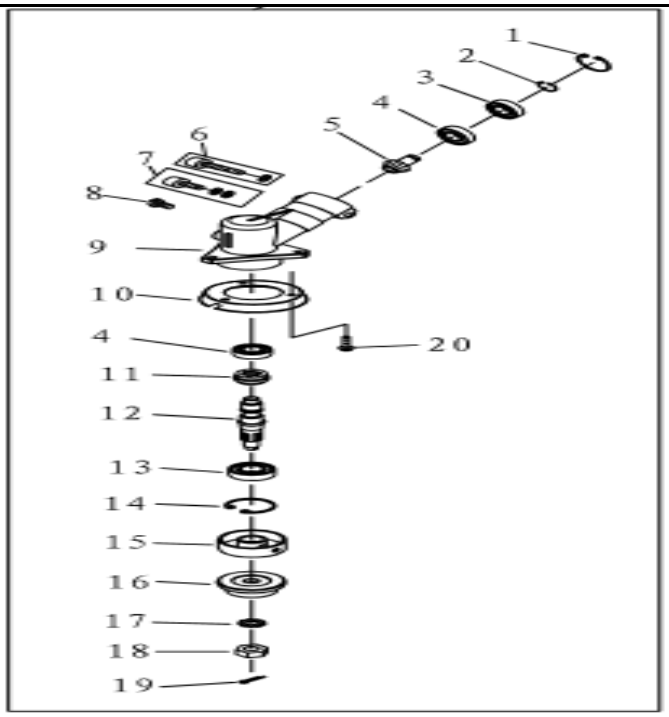

SI. NO.	PART IMAGE	DESCRIPTION	CHINESE CODE	ERP CODE	GRP	QTY PER MACHINE	MOQ	UNIT RATE	ORDER QTY	TOTAL RATE
1		Gear Case Assy	CG415.3	?GBKCGG52010A		1				0
2		Stop Ring 26	GB/T893.2	?GBKCGG520101		1				0
3		Stop Ring 10	GB/T894.1	?GBKCGG520102		1				0
4		Bearing 6000-2RS/P	GB/T276	?GBKCGG520103		1				0
5		Bearing 6000/P6	GB/T276	?GBKCGG520104		1				0
6		Pinion	CG415D.6-4	?GBKCGG520105		1				0
7		Screw M5×20	B/T70.1+GB/T9	GBKCGG520106		1				0
8		Screw M5×12	370+GB93+GB9	GBKCGG520107		1				0
9		Bolt M5×12	GB/T9074.11	?GBKCGG520108		1				0
10		Gear Case	BG305.12.4-4	?GBKCGG520109		1				0
11		Safety Gaurd	BG330H.7.3-1	?GBKCGG520110		1				0

12		Gear	BG-328.9.5-2	PGBKCGG520111		1				0
13		Gear Shaft	CG305F.1-1	PGBKCGG520112		1				0
14		Bearing 6002-2RS/P	GB/T276	PGBKCGG520113		1				0
15		Stop Ring 32	GB/T893.2	PGBKCGG520114		1				0
16		Holder A	BG305.12.4-5	PGBKCGG520115		1				0
17		Holder B	CG305F.1-3	PGBKCGG520116		1				0
18		Washer 10	GB/T862.1	PGBKCGG520117		1				0
19		Left Nut	CG305F.1-4	PGBKCGG520118		1				0
20		Pinn 2×16	GB/T91	PGBKCGG520119		1				0
21		Screw M5×12	GB/T9074.4	PGBKCGG520120		3				0

HANDLE (Fig. II)

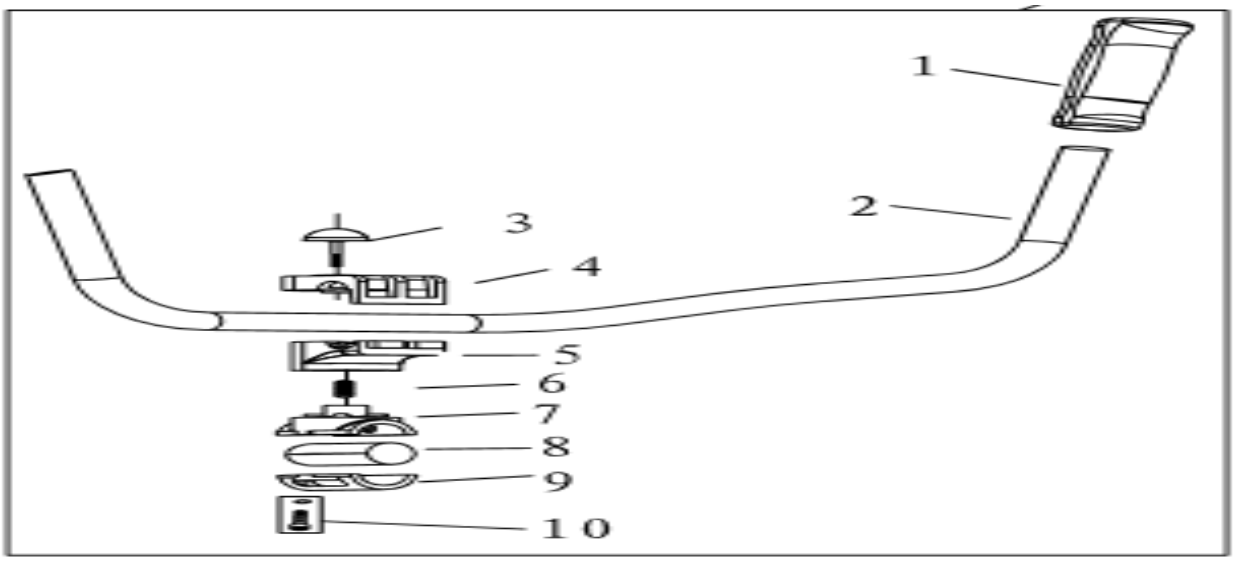

SI. NO.	PART IMAGE	DESCRIPTION	CHINESE CODE	ERP CODE	GRP	QTY PER MACHINE	MOQ	UNIT RATE	ORDER QTY	TOTAL RATE
1		Rubber Ring	BC36-8	PGBKCGH520101						0
2		Handgrip	BC36-6	PGBKCGH520102						0
3		Lock Bolt	BC36.2A	PGBKCGH520103						0
4		CAP, Upper	BC36-5	PGBKCGH520104						0
5		Bracket	BC36-3	PGBKCGH520105						0
9		Cap, Lower	BC36-1	PGBKCGH520109						0
10		Screw M5×20	BC36.4-2+GB9	PGBKCGH520110						0

SHAFT (Fig. III)

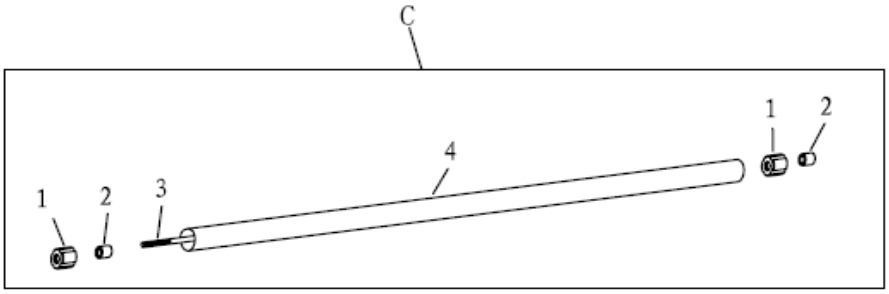

SI. NO.	PART IMAGE	DESCRIPTION	CHINESE CODE	ERP CODE	GRP	QTY PER MACHINE	MOQ	UNIT RATE	ORDER QTY	TOTAL RATE
1		Pipe Comp	BC34.1	SPGBKCGS52 010C						0
2		Rubber Cover	BG-328.9.4-5	SPGBKCGS52 0101						0
3		Oil Bearing	BG-328.9.4-4	SPGBKCGS52 0102						0
4		Drive Shaft	CG420.2-3	SPGBKCGS52 0103						
5		Pipe	BC34.1-1	SPGBKCGS52 0104						

CONTROL (Fig. IV)

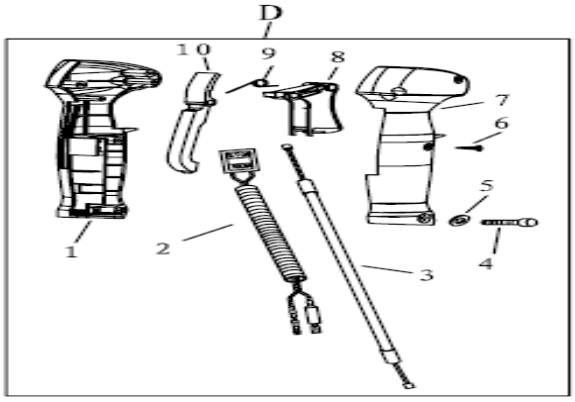

SI. NO.	PART IMAGE	DESCRIPTION	CHINESE CODE	ERP CODE	GRP	QTY PER MACHINE	MOQ	UNIT RATE	ORDER QTY	TOTAL RATE
1		Lever Assy	BC36.3	SPGBKCGS52 020D						0

2		Box Left	BC36.3.3	SPGBKCGS52 0201						
3		Stop Button Comp	BC36.3.1	SPGBKCGS52 0202						
4		Cable Comp	BC36.3.2	SPGBKCGS52 0203						
5		Bolt M5×30	GB/T818	SPGBKCGS52 0204						
6		Washer 5	GB/T848	SPGBKCGS52 0205						
7		Bolt ST3.5×13	GB/T845	SPGBKCGS52 0206						
8		Box,Right	BC36.3-1	SPGBKCGS52 0207						
9		Handgrip	BC36.3-6	SPGBKCGS52 0208						
10		Spring	BC36.3-5	SPGBKCGS52 0209						
11		HANDGRIP	BC36.3-3	SPGBKCGS52 0210						

DEBRIS SHIELD (Fig. V)

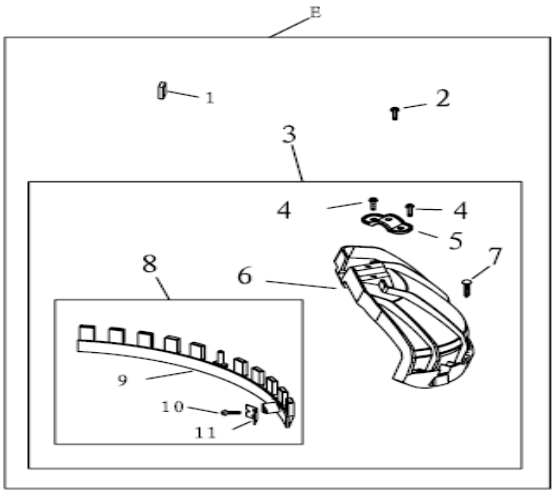

SI. NO.	PART IMAGE	DESCRIPTION	CHINESE CODE	ERP CODE	GRP	QTY PER MACHINE	MOQ	UNIT RATE	ORDER QTY	TOTAL RATE
1		Blade Cover	BC46-5	SPGBKCGS52 0301						0
2		Bolt M5×10	GB/T70.1	SPGBKCGS52 0302						
3		Gard Assy	BC36.4	SPGBKCGS52 0303						
4		Screw M5×12	BC36.4-2	SPGBKCGS52 0304						
5		Safety Guard Bracket	BC36.4-1	SPGBKCGS52 0305						
6		Safety Guard	BC36.4.1	SPGBKCGS52 0306						
7		Screw ST4.2×16	GB/T845	SPGBKCGS52 0307						
8		Guard assy	BC46.2.2	SPGBKCGS52 0308						
9		Guard	CG420.7.1.1-1	SPGBKCGS52 0309						
10		Screw ST4.2×16	GB/T845	SPGBKCGS52 0310						
11		Blade	BC46.2.2-1	SPGBKCGS52 0311						

CLUTCH (Fig. VI)

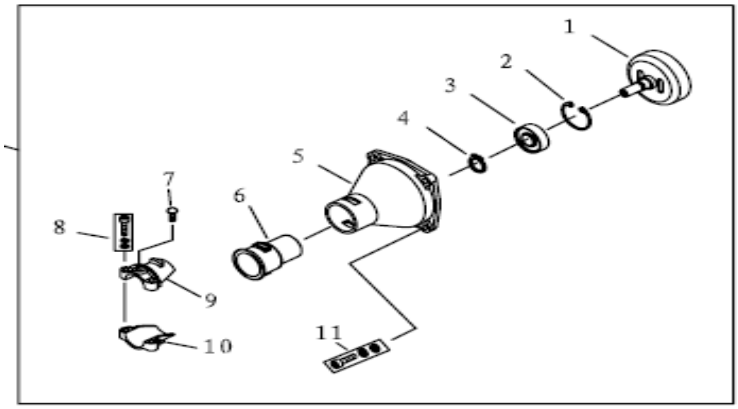

SI. NO.	PART IMAGE	DESCRIPTION	CHINESE CODE	ERP CODE	GRP	QTY PER MACHINE	MOQ	UNIT RATE	ORDER QTY	TOTAL RATE
1		Clutch Comp	CG415.2	SPGBKCGC52 010C						0

NYLON HEAD TAP AND GO (Fig. VII)

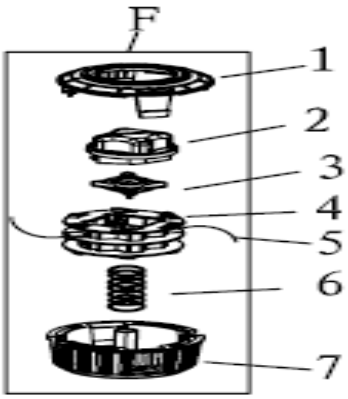

SI. NO.	PART IMAGE	DESCRIPTION	CHINESE CODE	ERP CODE	GRP	QTY PER MACHINE	MOQ	UNIT RATE	ORDER QTY	TOTAL RATE
1		Nylon Cutter Head	BC36.5	SPGBKCGS52 040F						0
2		CAP Rope Room	BC36.5-2	SPGBKCGS52 0401						
3		Bounce Object	BC36.5-1	SPGBKCGS52 0402						

5		Rope Seat	BC36.5-4	SPGBKCGS52 0404						
6		Cord ϕ2.0×3100		SPGBKCGS52 0405						
7		Spring	BC36.5-6	SPGBKCGS52 0406						
8		Rope Room	BC36.5.1	SPGBKCGS52 0407						

CLAMP PART (Fig. VIII)

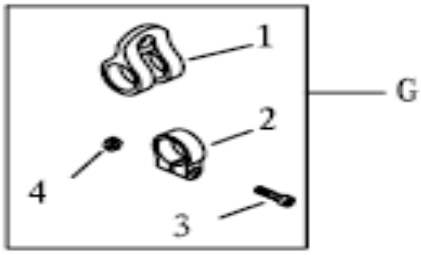

SI. NO.	PART IMAGE	DESCRIPTION	CHINESE CODE	ERP CODE	GRP	QTY PER MACHINE	MOQ	UNIT RATE	ORDER QTY	TOTAL RATE
1	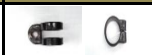	Holder assy	CG260.3	SPGBKCGP52 050G						0
2		Harness clamp	CG260.3.1	SPGBKCGP52 0501						
3		Clamp	CG260.3-1	SPGBKCGP52 0502						
4		Screw M5×20	GB/T70.1	SPGBKCGP52 0503						
5		Nut M5	GB/T889.1	SPGBKCGP52 0504						

ACCESSORIES (Fig. IX)

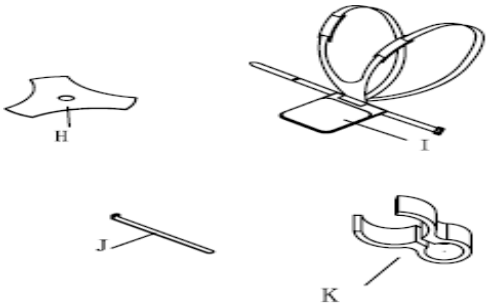

SI. NO.	PART IMAGE	DESCRIPTION	CHINESE CODE	ERP CODE	GRP	QTY PER MACHINE	MOQ	UNIT RATE	ORDER QTY	TOTAL RATE
1		Blade	CG420-2	ACGBKI00000 020						0

2		Harness Assy	CG260A-CE.1	SPGBKCGB52010I						
3		Wire Clamp Band	BG415-1	SPGBKCGB52010J						
4		Ring	CG260-E-GGP-1	SPGBKCGB52010K						

GEAR BOX(Fig. I)

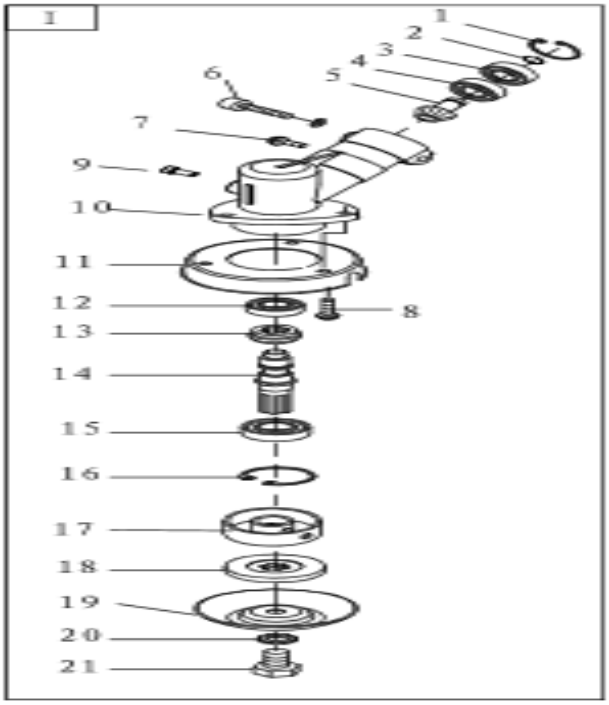

SI. NO.	PART IMAGE	DESCRIPTION	CHINESE CODE	ERP CODE	GRP	QTY PER MACHINE	MOQ	UNIT RATE	ORDER QTY	TOTAL RATE
I		Gear Case assy	BG330H.7.3	SPGBKBGG430101						0
1		Stop Ring 24	GB893.2	SPGBKBGG430101						0
2		Stop Ring	BG330H.7.3-3	SPGBKBGG430102						0
3		Bearing 61901-2RS/P6	GB/T 276	SPGBKBGG430103						0
4		Bearing 61901/P6	GB/T 276	SPGBKBGG430104						0
5		Pinion	BG330H.7.3-2	SPGBKBGG430105						0
6		Screw M5×20	GB/70.1 + GB/T93	SPGBKBGG430106						0
7		Screw M5×12	GB70.1+GB93+GB97	SPGBKBGG430107						0
8		Screw M5×12	GB/T9074.4	SPGBKBGG430108						0
9		Screw M5×12	GB/T 9074.11	SPGBKBGG430109						0
10		Gear Case	BG330H.7.3-4	SPGBKBGG430110						0

11		Safety Guard	BG330H.7.3-1	SPGBKBGG430111						0
12		Bearing 6000/P6	GB/T 276	SPGBKBGG430112						0
13		Gear	BG-328.9.5-2	SPGBKBGG430113						0
14		Gear Shaft	CG415D.6-5	SPGBKBGG430114						0
15		Bearing 6002-2RS/P6	GB/ T 276	SPGBKBGG430115						0
16		Stop ring 32	GB893.2	SPGBKBGG430116						0
17		Cutter holder	BG305.12.4-5	SPGBKBGG430117						0
18	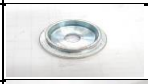	Cutter holder cap	BG-328.9.5-8	SPGBKBGG430118						0
19		Bolt Protection Cover	CG420.6-8	SPGBKBGG430119						0
20	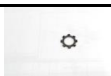	Washer 8	GB862.1	SPGBKBGG430120						0
21		Bolt	BG-328.9.5-10	SPGBKBGG430121						0

HANDLE (Fig. II)

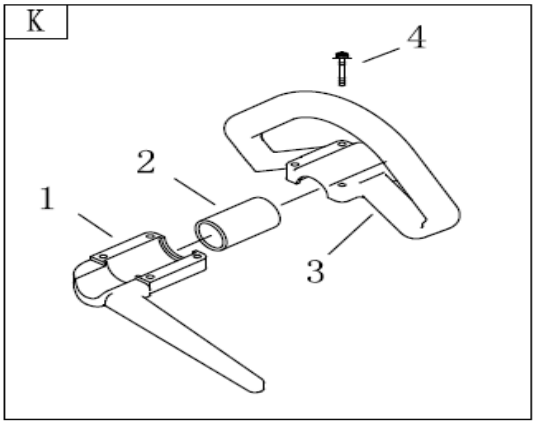

SI. NO.	PART IMAGE	DESCRIPTION	CHINESE CODE	ERP CODE	GRP	QTY PER MACHINE	MOQ	UNIT RATE	ORDER QTY	TOTAL RATE
K		Handle comp.	CG245Q.11	SPGBKBGH43010K						0

1		Handle cover	CG245Q.11.1	SPGBKBGH43 0101						0
2		Rubber Cover	BG330-CE.1-2	SPGBKBGH43 0102						0
3		Handle	CG245Q.11-1	SPGBKBGH43 0103						0
4		Screw M5×35	BC46.4-2+GB93+GB97	SPGBKBGH43 0104						0

SHOULDER BELT ASSEMBLY (Fig. III)

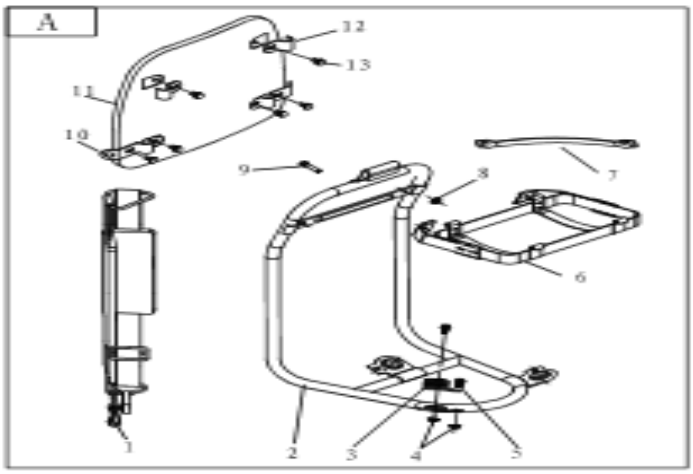

SI. NO.	PART IMAGE	DESCRIPTION	CHINESE CODE	ERP CODE	GRP	QTY PER MACHINE	MOQ	UNIT RATE	ORDER QTY	TOTAL RATE
1		Shoulder Belt assy	BG330H.1.1	SPGBKBGS43 0101						0
2		Sholuder frame COMP	BG330H.1.2	SPGBKBGS43 0102						0
6		Tank Holding Metal COMP	BG330H.1.3	SPGBKBGS43 0106						0
8		Nut M5	GB/T6183.1	SPGBKBGS43 0108						0
10		Holder, Lower	BG305-1	SPGBKBGS43 0110						0
11		Shoulder Plate Comp.	BG330H.1.4	SPGBKBGS43 0111						0
12		Holder, Upper	BG305-2	SPGBKBGS43 0112						0
13		Screw M5×16	GB/T9074.13	SPGBKBGS43 0113						0

DOWN BASE (Fig. IV)

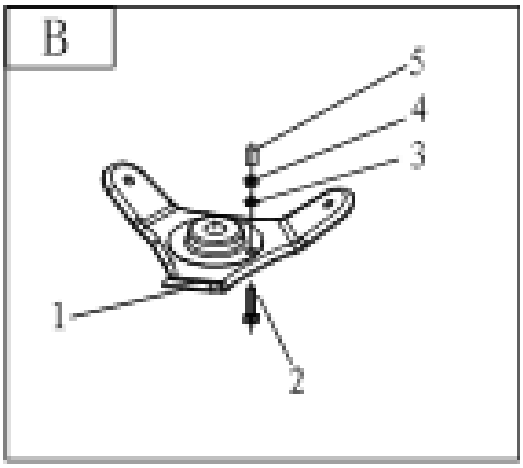

SI. NO.	PART IMAGE	DESCRIPTION	CHINESE CODE	ERP CODE	GRP	QTY PER MACHINE	MOQ	UNIT RATE	ORDER QTY	TOTAL RATE
B		Down Base Comp.	BG430.1.3.	SPGBKBGS43 020B						0
1		Down Base	BG430.1.3.1	SPGBKBGS43 0201						0
2		Screw M6×25	GB/T9074.4	SPGBKBGS43 0202						0
3		Washer 6	GB/T97.1	SPGBKBGS43 0203						0
4		Nut M6	GB/T6170	SPGBKBGS43 0204						0
5		Pipe	BG430.1.3-1	SPGBKBGS43 0205						0

ENGINE BASE (Fig. V)

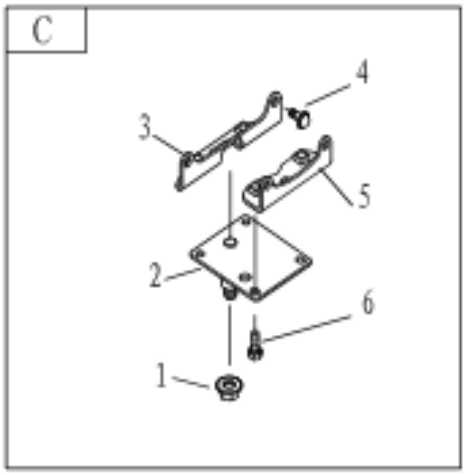

SI. NO.	PART IMAGE	DESCRIPTION	CHINESE CODE	ERP CODE	GRP	QTY PER MACHINE	MOQ	UNIT RATE	ORDER QTY	TOTAL RATE
1		Nut M10	GB/T6177.1	SPGBKBGS43 0301						0
2		Engine Base	BG430.1.2.2	SPGBKBGS43 0302						0
3		Back Support Comp.	BG330.1.2	SPGBKBGS43 0303						0
4		Screw M5×12	GB/T 9074.4	SPGBKBGS43 0304						0
5		Front Support Comp	BG 430.1.2.1	SPGBKBGS43 0305						0
6		Screw M6×12	GB/T9074.12	SPGBKBGS43 0306						0

SHAFT (Fig. VI)

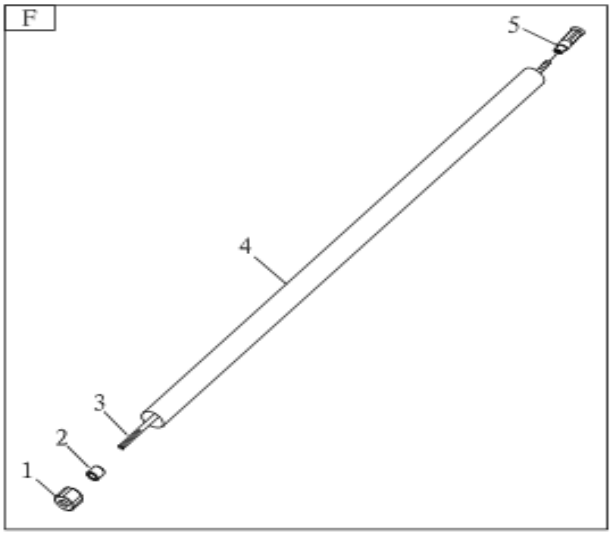

SI. NO.	PART IMAGE	DESCRIPTION	CHINESE CODE	ERP CODE	GRP	QTY PER MACHINE	MOQ	UNIT RATE	ORDER QTY	TOTAL RATE
F	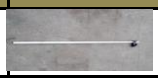	Pipe Comp.	BG330H.7.1	SPGBKBGS430 40F						0
1		Rubber Cover	BG-328.9.4-5	SPGBKBGS430 401						0
2		Oil-Bearing	BG-328.9.4-4	SPGBKBGS430 402						0
3		Drive Shaft	BG330H.7.1-1	SPGBKBGS430 403						0
4		Pipe	BG330H.7.1-3	SPGBKBGS430 404						0
5		Adapter Comp.	BG-328.9.4-1	SPGBKBGS430 405						0

JOINT PIPE (Fig. VII)

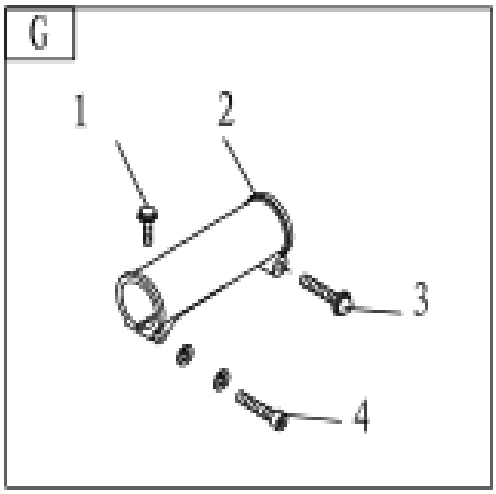

SI. NO.	PART IMAGE	DESCRIPTION	CHINESE CODE	ERP CODE	GRP	QTY PER MACHINE	MOQ	UNIT RATE	ORDER QTY	TOTAL RATE
1		Screw M5×12	70.1+GB93+GP	GBKBGS430501						0
2		Joint Pipe	BG330H.7-1	PGBKBGS430502						0
3		Screw M5×30	70.1+GB93+GP	GBKBGS430503						0
4		Bolt M5×20	70.1+GB93+GP	GBKBGS430504						0

SHOULDER PLATE (Fig. V)

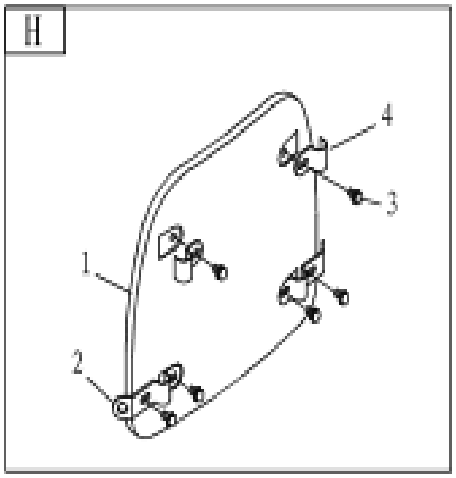

SI. NO.	PART IMAGE	DESCRIPTION	CHINESE CODE	ERP CODE	GRP	QTY PER MACHINE	MOQ	UNIT RATE	ORDER QTY	TOTAL RATE
1		Shoulder Plate Comp.	BG330H.1.4	SPGBKBGS43 0601						0
2		Holder, Lower	BG305-1	SPGBKBGS43 0602						0

3		Screw M5×16	GB/T9074.13	SPGBKBGS43 0603						0
4		Holder, Upper	BG305-2	SPGBKBGS43 0604						0

FLEXIBLE LINER (Fig. V)

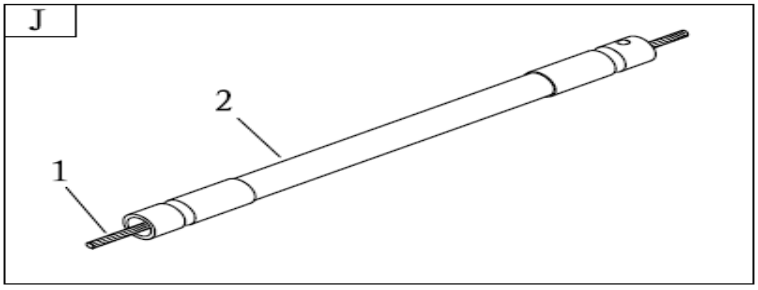

SI. NO.	PART IMAGE	DESCRIPTION	CHINESE CODE	ERP CODE	GRP	QTY PER MACHINE	MOQ	UNIT RATE	ORDER QTY	TOTAL RATE
J		Flexible Liner Comp	BG 330H.6	PGBKBGS43070J						0

CONTROL (Fig. VI)

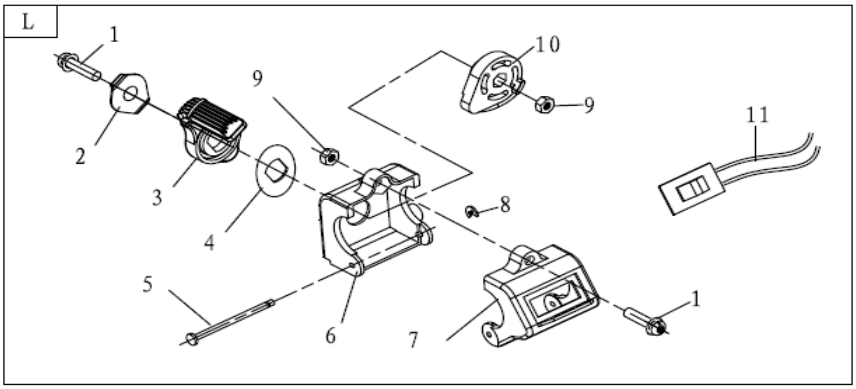

SI. NO.	PART IMAGE	DESCRIPTION	CHINESE CODE	ERP CODE	GRP	QTY PER MACHINE	MOQ	UNIT RATE	ORDER QTY	TOTAL RATE
L		Lever Assy	BG330H.7.2	PGBKBGS43080L						0
1		Screw M5×20	GB/T9074.4	PGBKBGS430801						0
2		washer	BG330H.7.2-6	PGBKBGS430802						0
3		Throttle lever	BG330H.7.2-2	PGBKBGS430803						0
4		Gasket	BG330H.7.2-5	PGBKBGS430804						0

5		Pin	BG330H.7.2-7	PGBKBGS430805						0
6		Box, Nether	BG330H.7.2-3	PGBKBGS430806						0
7		Box, Upper	BG330H.7.2-1	PGBKBGS430807						0

8		Stop ring ϕ2.5	GB/T896	PGBKBGS430808						0
9		Nut M5	GB/T6170	PGBKBGS430809						0
10		Throttle lever	BG330H.7.2-4	PGBKBGS430810						0
11		Stop switch	BG330H.7.2.1	PGBKBGS430811						0

SAFETY GUARD (Fig. VI)

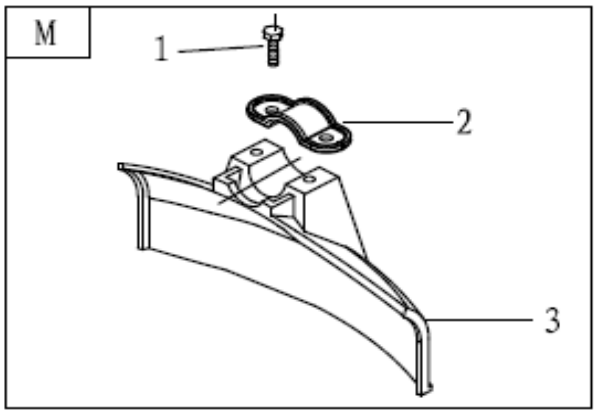

SI. NO.	PART IMAGE	DESCRIPTION	CHINESE CODE	ERP CODE	GRP	QTY PER MACHINE	MOQ	UNIT RATE	ORDER QTY	TOTAL RATE
M		Safety Guard assy	BG305.13	PGBKBGS43090M						0
1		Screw M6×25	GB9074.13	PGBKBGS430901						0
2		Safety Guard Bracke	BG305.13-1	PGBKBGS430902						0
3		Safety Guard	BG305.13.1	PGBKBGS430903						0

CLUTCH (Fig. VI)

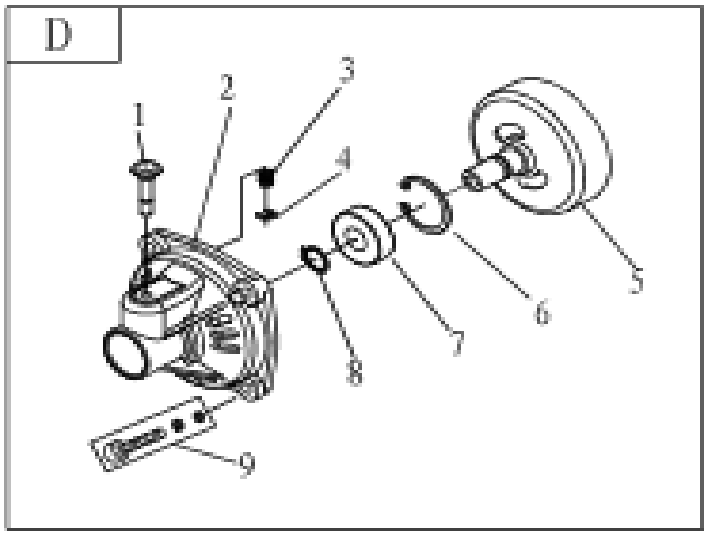

SI. NO.	PART IMAGE	DESCRIPTION	CHINESE CODE	ERP CODE	GRP	QTY PER MACHINE	MOQ	UNIT RATE	ORDER QTY	TOTAL RATE

1		Pin	BG330H.5-3	PGBKBGC430101					0
2		Clutch case	BG330H.5-1	PGBKBGC430102					0
3		Spring	BG330H.5-2	PGBKBGC430103					0
4		Stop ring 5	GB/T896	PGBKBGC430104					0
5		Clutch Drum Comp.	BG-328.8.1A	PGBKBGC430105					0
6		Stop Ring 35	GB/T893.1	PGBKBGC430106					0
7		Bearing 6202-2RZ/P6	GB/T276	PGBKBGC430107					0
8	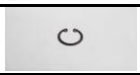	Stop Ring 15	GB/T894.1	PGBKBGC430108					0
9		Screw M6×20	70.1+GB93+GB	PGBKBGC430109					0

BODY PARTS (Fig. VI)

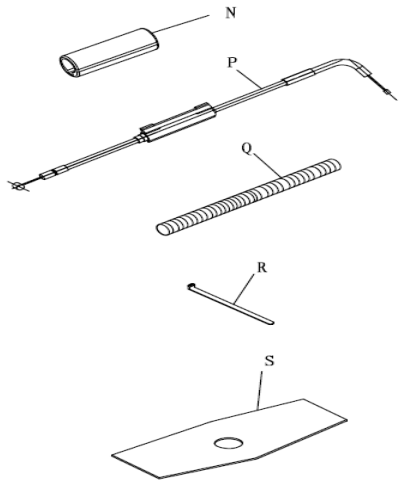

SI. NO.	PART IMAGE	DESCRIPTION	CHINESE CODE	ERP CODE	GRP	QTY PER MACHINE	MOQ	UNIT RATE	ORDER QTY	TOTAL RATE
N		Handle Brush Cover	BG330H.7-2	PGBKBGB43010N						0
P		Throttle Wire assy	BG430H.2	PGBKBGB43010P						0
Q		Tube	BG-328A-2	PGBKBGB43011Q						0
R		Wire Clamp Band	BG415-1B	PGBKBGB43012R						0
S		Blade	BG-328-10	CGBKI00000010						0
T		Throttle wire connector		SPGBKBGB43012T						